NORMALUX

Technical datasheet

VÍA S

Emergency Lighting

Ref. VTVID

LED

UNE 60598-2-22
230V 50/60HZ

Emergency Lighting: VÍA S. Reference: VTVID, manufactured by Normalux. Lumens 220 lm. Autonomy (h) 1h. Operating mode: Mantained - Non Maintained. Installation: Track. Light source: Led. Battery of: Ni-Cd 3,6V/750mAh. IP: 40. IK: 04. Version: DALI. Color: White. Casing: Self-Extinguishing ABS. Voltage: 230V 50/60Hz. Dimensions (mm): 142 x 142 x 96 mm. Manufactured according UNE 60598-2-22 regulations.

Lumens	220 lm
Color temperatures (K)	5700
Light source	Led
Autonomy (h)	1h
Battery	Ni-Cd 3,6V/750mAh
Power (W)	3,4W
Operating mode	Mantained - Non Maintained
Class	II
IP	40
IK	04
Operating temperature (ºC)	5 to 35
Remote control	No

Dimensions (mm):

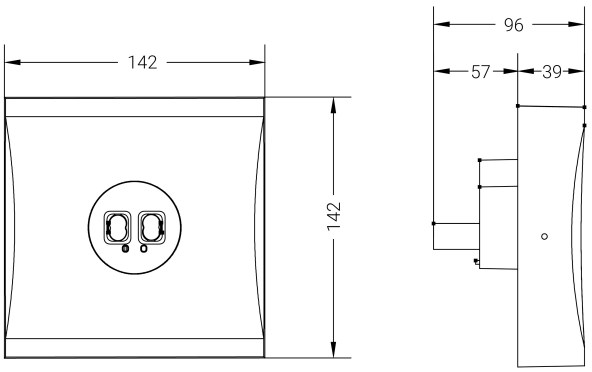

Photometric data:

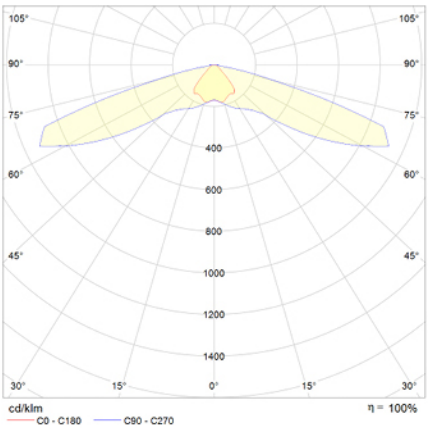

Parque tecnológico de Asturias. Calle Ablanal 1, 33428 Llanera (Asturias), Spain
T. +34 985 267 100 F. +34 985 266 992
normagrup@normagrup.com
www.normalux.com

Normagrup
Sense of Technology