NORMALUX

Technical datasheet

ESTELA

Step Lighting

Ref. ERR-S-1

LED CE

EN 60598-1
230V 50/60HZ

Step Lighting: ESTELA. Reference: ERR-S-1, manufactured by Normalux. Autonomy (h)1h .Operating mode: Maintained. Installation: Surface Mounting. Light source: Led. IP: 44. IK: 07. Color: Anthracite. Casing: Self-Extinguishing ABS+PC. Voltage: 230V 50/60Hz. Dimensions (mm): 83 x 83 x 30 mm. Manufactured according EN 60598-1 regulations.

Autonomy (h)	1h
Light source	Led
Battery	Ni-Cd 3,6V/60mAh
Power consumption (W)	0,35W
Operating mode	Maintained
Class	II
IP	44
IK	07
Operating temperature (ºC)	5 to 35
Remote control	No

Dimensions (mm):

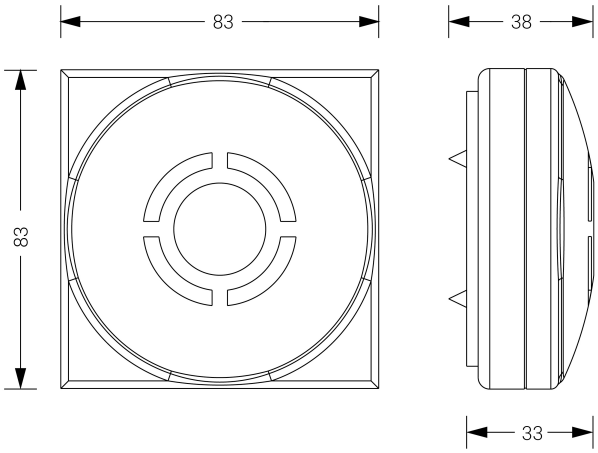

Unit 6 Quartz Close. B5K Business Park.
Amington. Tamworth. B77 4GR, England
T. 01827 816333
normagrup@normagrup.uk
www.normalux.com

Normagrup
Sense of Technology