NORMALUX

Technical datasheet

PASSO

Step Lighting

Ref. BP24

LED

EN 60598-1
24VDC

Step Lighting: PASSO. Reference: BP24, manufactured by Normalux. Operating mode: Maintained. Installation: Recessed Mounting. Light source: Led. IP: 65. IK: 07. Color: White. Casing: Polycarbonate. Voltage: 24Vdc. Dimensions (mm): 35 x 35 x 28 mm. Manufactured according EN 60598-1 regulations.

Color temperatures (K)	5600
Light source	Led
Power consumption (W)	0,5W
Num of MA24-6 beacons	20
Operating mode	Maintained
Class	III
IP	65
IK	07
Operating temperature (ºC)	-25 to 55
Remote control	No

Dimensions (mm):

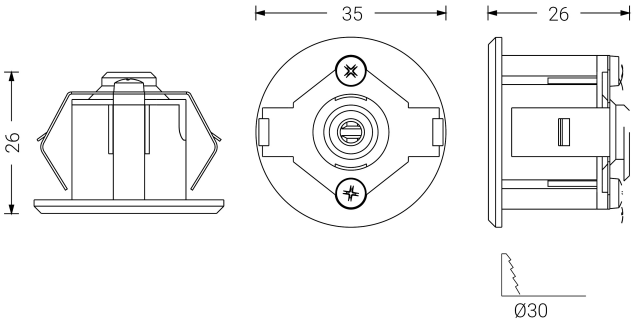

Unit 6 Quartz Close. B5K Business Park.
Amington. Tamworth. B77 4GR, England
T. 01827 816333
normagrup@normagrup.uk
www.normalux.com

Normagrup
Sense of Technology