NORMALUX

Technical datasheet

Bessel

Emergency Lighting

Ref. L3-100L

LED

UNE 60598-2-22
230V 50HZ

Emergency Lighting: Bessel. Reference: L3-100L, manufactured by Normalux. Lumens 75 lm. Autonomy (h) 3h. Operating mode: Non Maintained. Installation: Surface Mounting. Light source: Led. Battery of: Ni-Cd 4,8V/750mAh. IP: 42. IK: 04. Version: Standard. Color: White. Casing: Self-Extinguishing ABS+PC. Voltage: 230V 50Hz. Dimensions (mm): 250 x 110 x 38 mm. Manufactured according UNE 60598-2-22 regulations. Compatible with S-TE remote control.

Lumens	75 lm
Color temperatures (K)	5700
Light source	Led
Autonomy (h)	3h
Battery	Ni-Cd 4,8V/750mAh
Power (W)	1W
Operating mode	Non Maintained
Class	II
IP	42
IK	04
Operating temperature (ºC)	5 to 35
Remote control	Yes

Dimensions (mm):

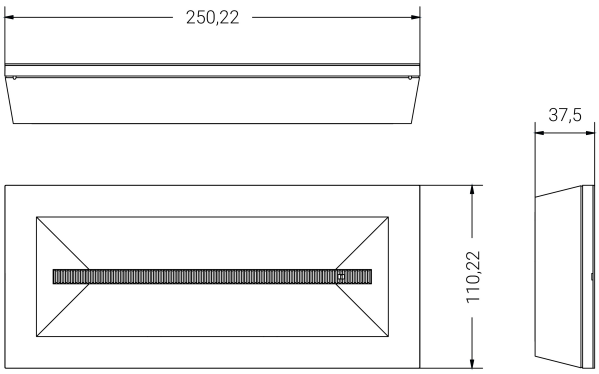

Photometric data:

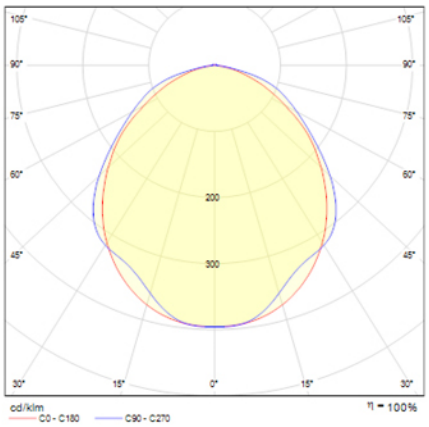

Unit 6 Quartz Close. B5K Business Park.
Amington. Tamworth. B77 4GR, England
T. 01827 816333
normagrup@normagrup.uk
www.normalux.com

Normagrup
Sense of Technology