NORMALUX

Technical datasheet

GS

Emergency Lighting

Ref. G-100L

LED

UNE 60598-2-22
230V 50/60HZ

Emergency Lighting: GS. Reference: G-100L, manufactured by Normalux. Lumens 110 lm. Autonomy (h) 1h. Operating mode: Non Maintained. Installation: Surface Mounting. Light source: Led. Battery of: Ni-Cd 3.6V/600mAh. IP: 44. IK: 07. Version: Standard. Color: White. Casing: Self-Extinguishing ABS+PC. Voltage: 230V 50/60Hz. Dimensions (mm): 252 x 100 x 40 mm. Manufactured according UNE 60598-2-22 regulations. Compatible with S-TE remote control.

Lumens	110 lm
Color temperatures (K)	5700
Light source	Led
Autonomy (h)	1h
Battery	Ni-Cd 3.6V/600mAh
Power (W)	1W
Operating mode	Non Maintained
Class	II
IP	44
IK	07
Operating temperature (ºC)	5 to 35
Remote control	Yes

Dimensions (mm):

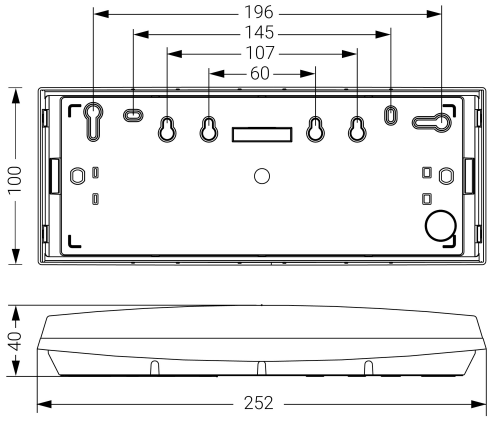

Photometric data:

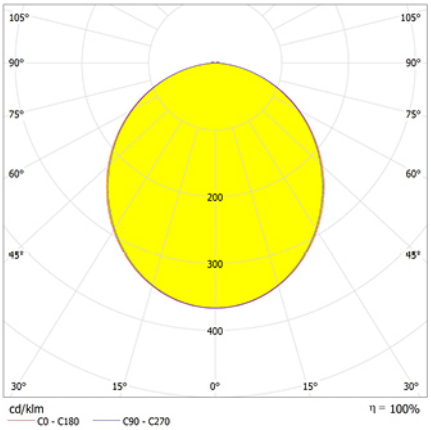

Unit 6 Quartz Close. B5K Business Park.
Amington. Tamworth. B77 4GR, England
T. 01827 816333
normagrup@normagrup.uk
www.normalux.com

Normagrup
Sense of Technology