NORMALUX

Technical datasheet

HERMETIC EX

Emergency Lighting

Ref. DEL-300EX

LED

UNE-EN 60598-2-22, UNE-EN 60079-15
230V 50/60HZ

Emergency Lighting: HERMETIC EX. Reference: DEL-300EX, manufactured by Normalux. Lumens 185 lm. Autonomy (h) 1h. Operating mode: Maintained. Installation: . Light source: Led. Battery of: Ni-Cd 6V/750mAh. IP: 65. IK: 10. Version: Standard. Color: White. Casing: Polycarbonate. Voltage: 230V 50/60Hz. Dimensions (mm): 361 x 131 x 69 mm. Manufactured according UNE-EN 60598-2-22, UNE-EN 60079-15 regulations. Compatible with S-TE remote control.

CATEGORY 3 ACCORDING TO ATEX 2014/34/UE

Lumens	185 lm
Color temperatures (K)	8000
Light source	Led
Autonomy (h)	1h
Battery	Ni-Cd 6V/750mAh
Power (W)	4,84W
Operating mode	Maintained
Class	II
IP	65
IK	10
Operating temperature (ºC)	5 to 35
Remote control	Yes

Dimensions (mm):

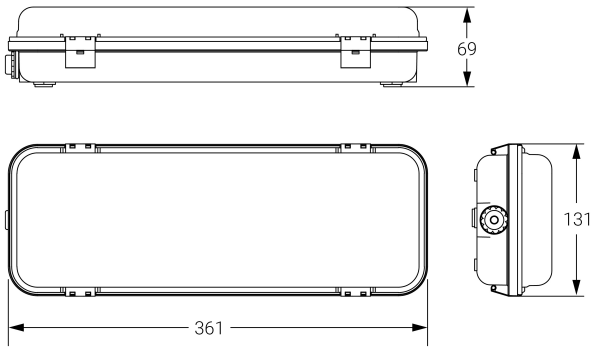

Photometric data:

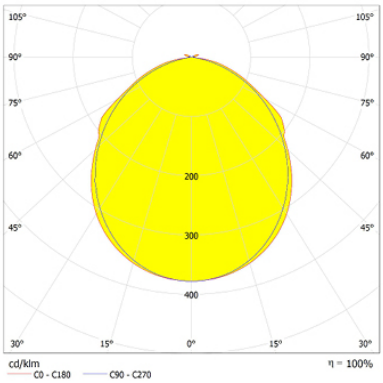

Unit 6 Quartz Close. B5K Business Park.
Amington. Tamworth. B77 4GR, England
T. 01827 816333
normagrup@normagrup.uk
www.normalux.com

Normagrup
Sense of Technology