NORMALUX

Technical datasheet

VÍA S

Emergency Lighting

Ref. VMVAH3

LED

UNE 60598-2-22
230V 50/60HZ

Emergency Lighting: VÍA S. Reference: VMVAH3, manufactured by Normalux. Lumens 450 lm. Autonomy (h) 3h. Operating mode: Mantained - Non Maintained. Installation: Ceiling mounted. Light source: Led. Battery of: Ni-Cd 3.6V/4Ah. IP: 40. IK: 04. Version: Self-test. Color: White. Casing: Self-Extinguishing ABS. Voltage: 230V 50/60Hz. Dimensions (mm): 142 x 142 x 39 mm. Manufactured according UNE 60598-2-22 regulations.

Lumens	450 lm
Color temperatures (K)	5700
Light source	Led
Autonomy (h)	3h
Battery	Ni-Cd 3.6V/4Ah
Power (W)	7W
Operating mode	Mantained - Non Maintained
Class	II
IP	40
IK	04
Operating temperature (ºC)	5 to 35
Remote control	No

Dimensions (mm):

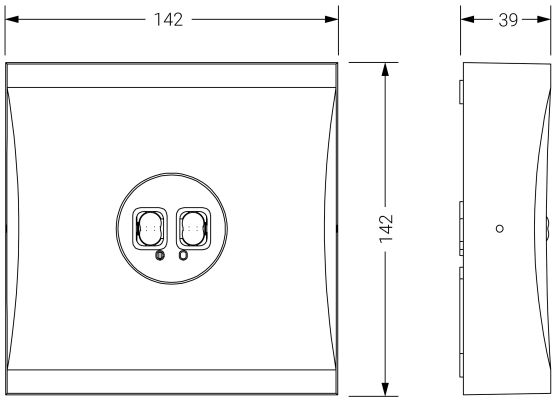

Photometric data:

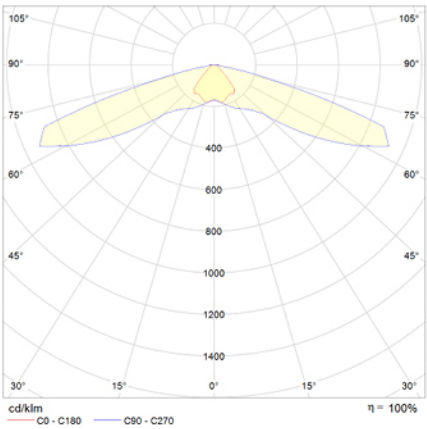

Unit 6 Quartz Close. B5K Business Park.
Amington. Tamworth. B77 4GR, England
T. 01827 816333
normagrup@normagrup.uk
www.normalux.com

Normagrup
Sense of Technology