NORMALUX

Technical datasheet

LISSA S

Exit signs

Ref. LNE

LED CE

EN 60598-1, EN 60598-2-22, EN 1838
230V 50/60HZ

Exit signs: LISSA S. Reference: LNE, manufactured by Normalux. Autonomy (h) 1h. Operating mode: Mantained - Non Maintained. Installation: Recessed Mounting. Light source: Led. Battery of: Ni-MH 3,6V/2700mAh. IP: 20. IK: 04. Version: Standard. Color: White. Casing: . Voltage: 230V 50/60Hz. Manufactured according EN 60598-1, EN 60598-2-22, EN 1838 regulations.

Dimensions (mm):

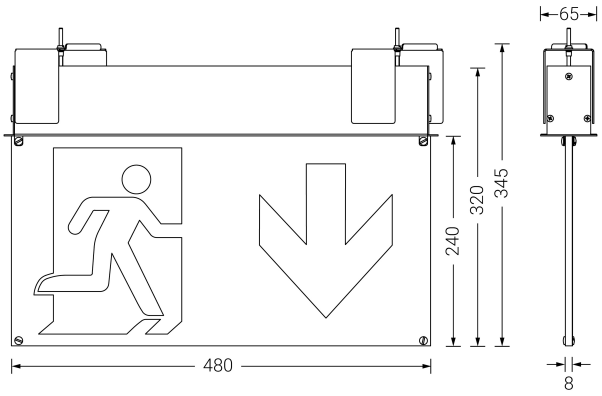

Color temperatures (K)	5700
Light source	Led
Autonomy (h)	1h
Battery	Ni-MH 3,6V/2700mAh
Power (W)	4,5W
Operating mode	Mantained - Non Maintained
Class	I
IP	20
IK	04
Operating temperature (ºC)	5 to 35
Maximum viewing distance	48m
Remote control	No

* According to EN 1838 regulations

Parque tecnológico de Asturias. Calle Ablanal 1, 33428 Llanera (Asturias), Spain
T. +34 985 267 100 F. +34 985 266 992
normagrup@normagrup.com
www.normalux.com

Normagrup
Sense of Technology