NORMALUX

Technical datasheet

LISSA S

Exit signs

Ref. LNI-S16L24

LED CE

EN 60598-1, EN 1838
24VDC

Exit signs: LISSA S. Reference: LNI-S16L24, manufactured by Normalux. Operating mode: Maintained. Installation: Surface Mounting. Light source: Led. IP: 20. IK: 04. Version: CBSi (24V CC). Color: White. Casing: . Voltage: 24Vdc. Manufactured according EN 60598-1, EN 1838 regulations.

Color temperatures (K)	5700
Light source	Led
Power (W)	4W
Operating mode	Maintained
Class	I
IP	20
IK	04
Operating temperature (ºC)	-25 to 55
Maximum viewing distance	48m
Remote control	No

* According to EN 1838 regulations

Dimensions (mm):

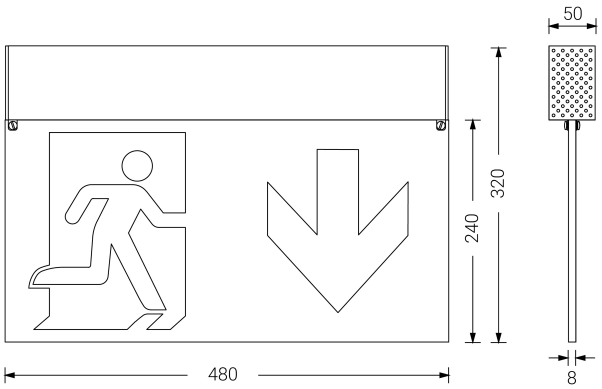

Parque tecnológico de Asturias. Calle
Ablanal 1, 33428 Llanera (Asturias), Spain
T. +34 985 267 100 F. +34 985 266 992
normagrup@normagrup.com
www.normalux.com

Normagrup
Sense of Technology